XZ-axis Cross Roller Guide Stage □25～□80: B61-25/40/60/80

B61-□A (Feeding positionA)

B61-□C (Feeding positionC)

RoHS

■Stages combining X and Z-axis cross roller guide.
■Main body is light weight by aluminum-made.
■Selectable feeding position center pushing or side pushing.

SURUGA SEIKI CAD 3D·2D

Dimensional outline drawings

B61-25AN

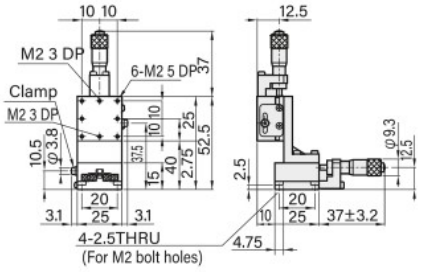

B61-40A

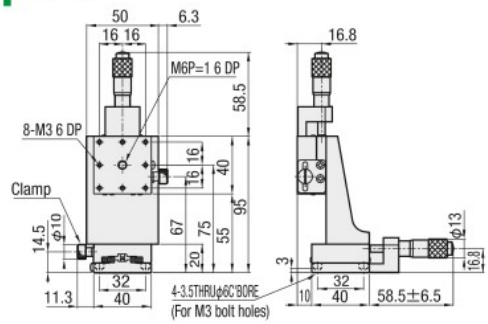

B61-60A

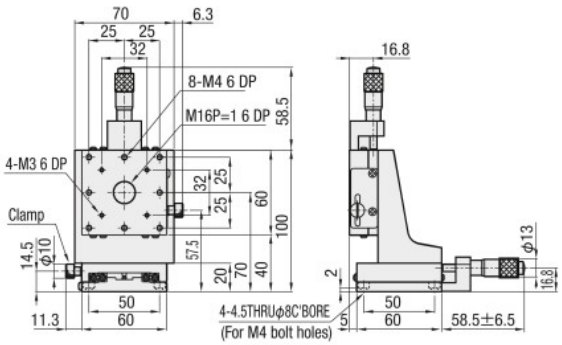

B61-80A

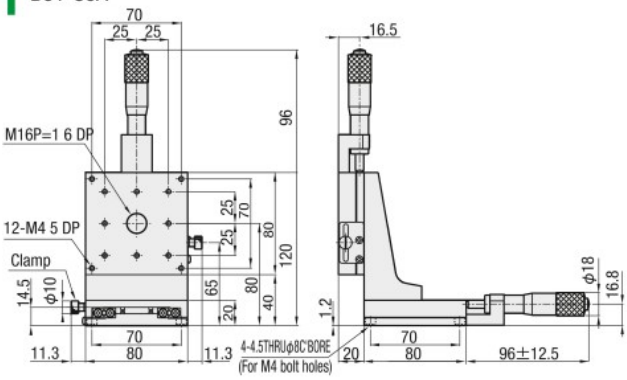

■Configuration

Model	B61-	25AN	25CN	References	40A	40C	References	60A	60C	References	80A	80C	References
Z	B31-	25AN	25CN	➲P.2-079	40A	40C	➲P.2-079	60A	60C	➲P.2-079	80A	80C	➲P.2-079
X	B11-	25AN	25CN	➲P.2-063～	40A	40C	➲P.2-063～	60A	60C	➲P.2-063～	80A	80C	➲P.2-065～

1 Model — Option code

B61-□C

1 2

Select the option code as below.

1 Stage table size

25	25×25mm
40	40×40mm
60	60×60mm
80	80×80mm

2 Feeding position

	Center feeding position	Side looks down
Specification	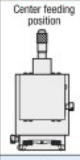	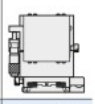
Code	A ※□25 AN	C ※□25 CN

SPEC • Main material:Aluminum • Surface finishing:Black alumite processing

Model		Feeding position	Travel distance (mm)	Load capacity	Allowable load for moment (N・m) Pitch	Yaw	Roll	Moment rigidity (*/N・cm) Pitch	Yaw	Roll	Verticality (Within)	Motion verticality (Within)	Weight (kg)	Provided screws (Hex socket screws)
B61 —	25	A: Center C: Side ※ Minimum reading of micrometer 10μm/Scale	±3.2	0.5kgf [4.9N]	1.1	0.4	0.4	6.06	4.65	4.65	80μm	25μm	0.1	4 of M2 — 6
	40		±6.5	1.0kgf [9.8N]	2.7	2.0	2.0	0.76	0.70	0.70	110μm	40μm	0.37	4 of M3 — 6
	60			2.0kgf [19.6N]	5.2	4.3	4.3	0.24	0.18	0.18			0.71	4 of M4 — 6
	80		±12.5	5.0kgf [49N]	19.2	15.1	15.1	0.10	0.09	0.09			1.32 ※ C:1.45	