## Dimensions

### MHZ2-6□ Double acting/Single acting Basic type

Use the MHZJ2 series with a dust cover when used in a place where there may be dust.

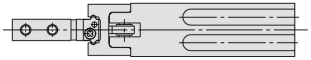

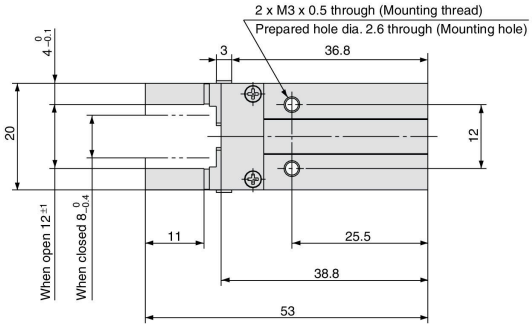


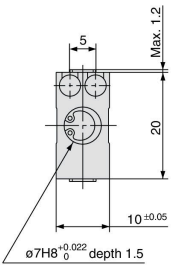


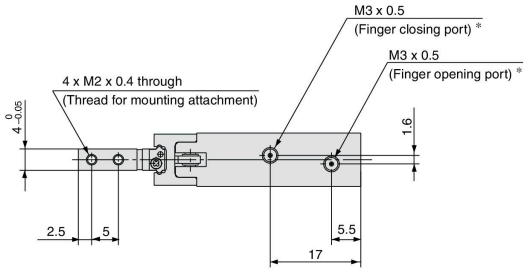


* For single action, the port on one side is a breathing hole.
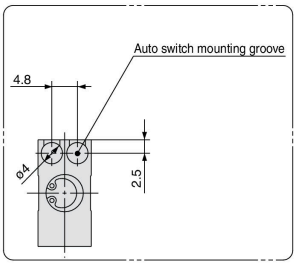
### Auto Switch Mounting Groove Dimensions