Tool sets / cases
Socket wrenches
Ratchet wrenches
Offset wrenches, grips
Gear wrenches, open-end spanners
Spanners
Safety ropes
Combination hammer
Sockets
Hex key wrenches
Adjustable angle wrenches
Pliers
Hook spanners, pin spanners
Toggle clamps
C clamps
L clamps
Super setters
Grip pliers
Welding tools
Iron man

TOGGLE CLAMP (Latch Type)

TLA200F

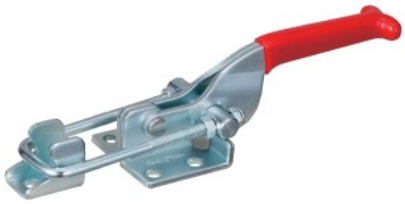

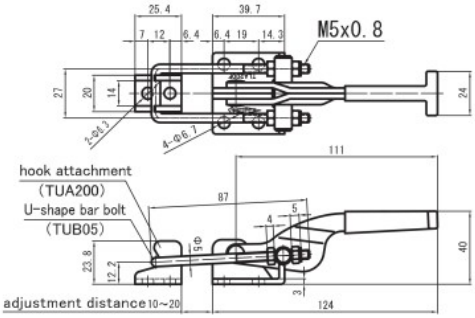

Item No.	Base type	N.W.(g)
TLA200F	Flange	205

- Max. holding capacity : 3.18kN
- Adjustment distance : 10~20mm
- Supporting pin : stainless steel

TLA250F

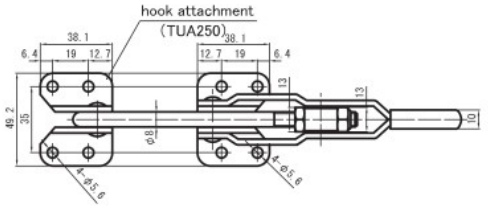

Item No.	Base type	N.W.(g)
TLA250F	Flange	330

- Max. holding capacity : 1.7kN
- Adjustment distance : 40~50mm
- Supporting pin : stainless steel

TLA400F

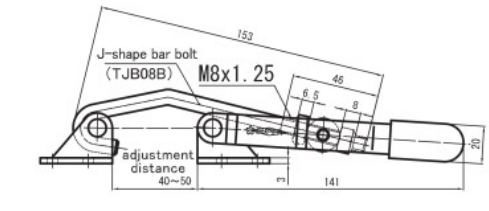

Item No.	Base type	N.W.(g)
TLA400F	Flange	670

- Max. holding capacity : 7kN
- Adjustment distance : 50~75mm
- Supporting pin : stainless steel

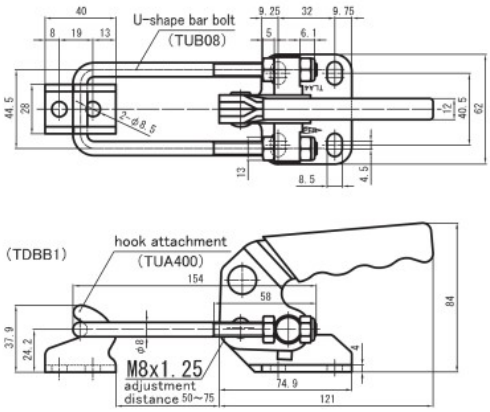

BURR CLAMP

TDB1F

▶Feature

- Arm and handle can be welded and assembled in free angle, so this clamp can be used in many different situations.

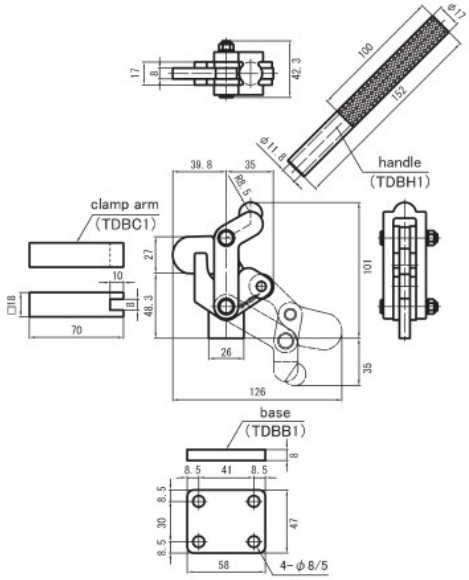

Item No.	Base type	N.W.(g)
TDB1F	Flange	830

- Max. holding capacity : 2.0kN
- Clamp arm moving angle : 190°
- Handle operation angle : 118°