Dimensions

CKG1□40, 50, 63 Rod mounting type

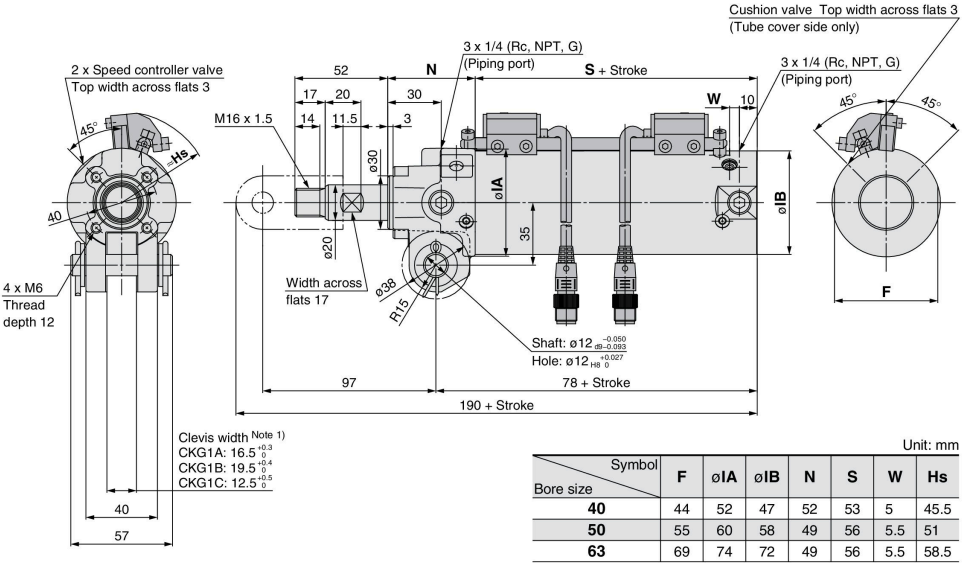

Unit: mm

Symbol / Bore size	F	øIA	øIB	N	S	W	Hs
40	44	52	47	52	53	5	45.5
50	55	60	58	49	56	5.5	51
63	69	74	72	49	56	5.5	58.5

Note 1) Indicates the point where the clevis is narrowest (on the tube side)

CKP1□40, 50, 63 Rod mounting type

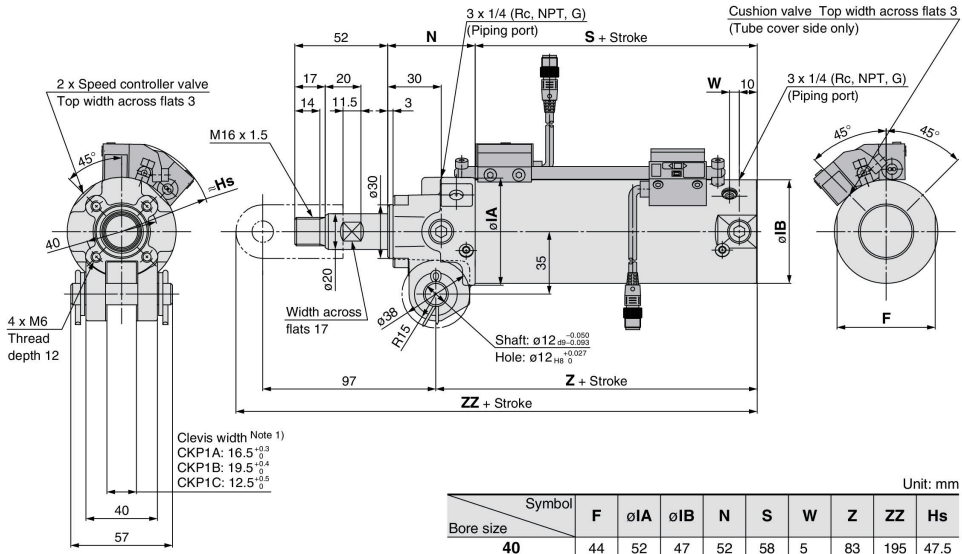

Unit: mm

Symbol / Bore size	F	øIA	øIB	N	S	W	Z	ZZ	Hs
40	44	52	47	52	58	5	83	195	47.5
50	55	60	58	49	56	5.5	78	190	51
63	69	74	72	49	56	5.5	78	190	57.5

Note 1) Indicates the point where the clevis is narrowest (on the tube side)